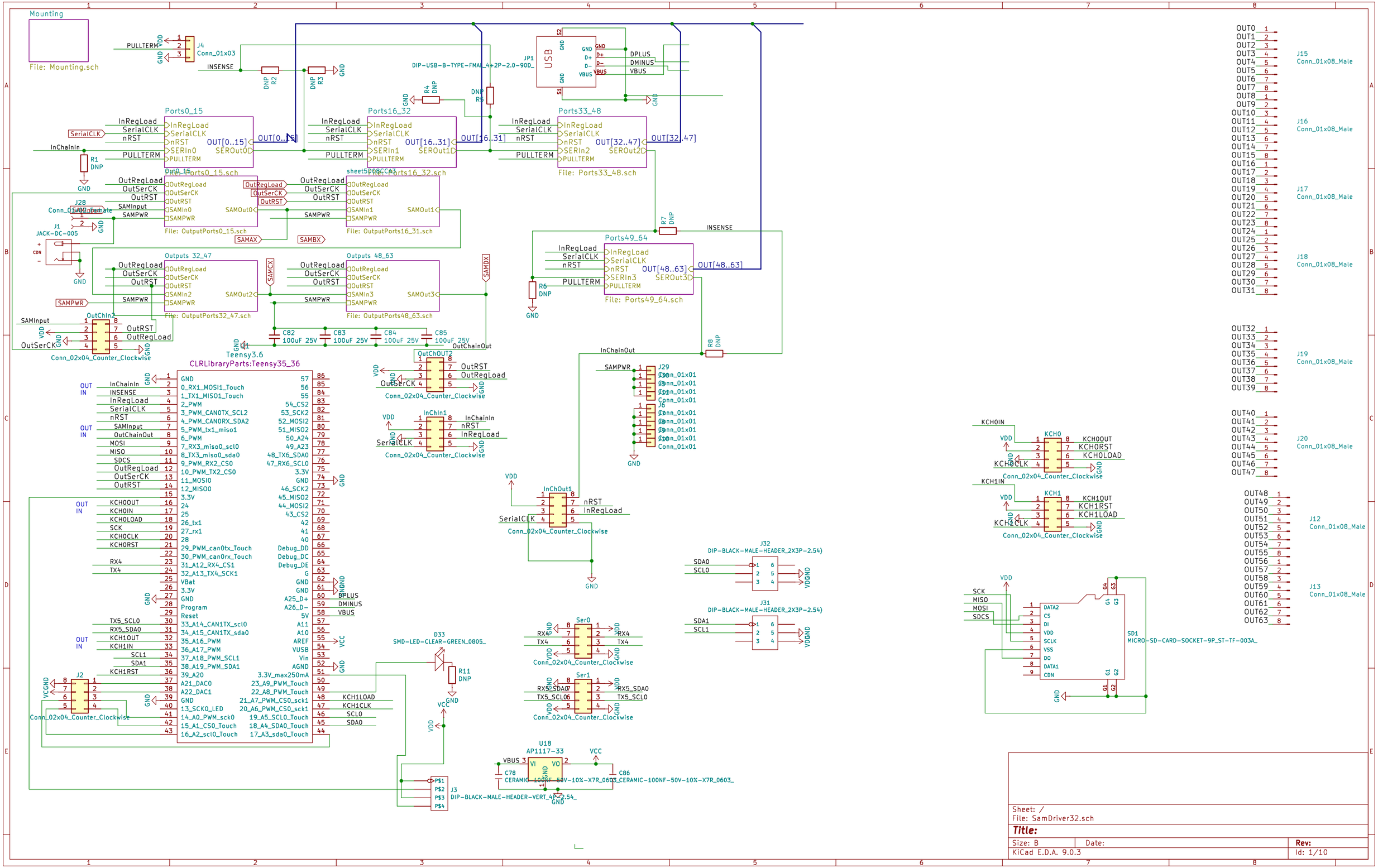

Sheet: /
File: SamDriver32.sch

Title:

Size: B	Date:	Rev:
KiCad E.D.A. 9.0.3		Id: 1/10

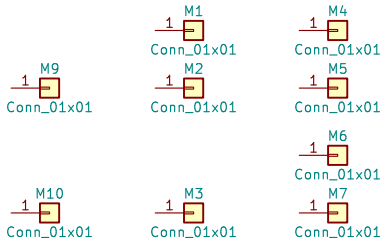

Sheet: /Mounting/
File: Mounting.sch

Title:

Size: A4	Date:	**Rev:**
KiCad E.D.A. 9.0.3		Id: 2/10

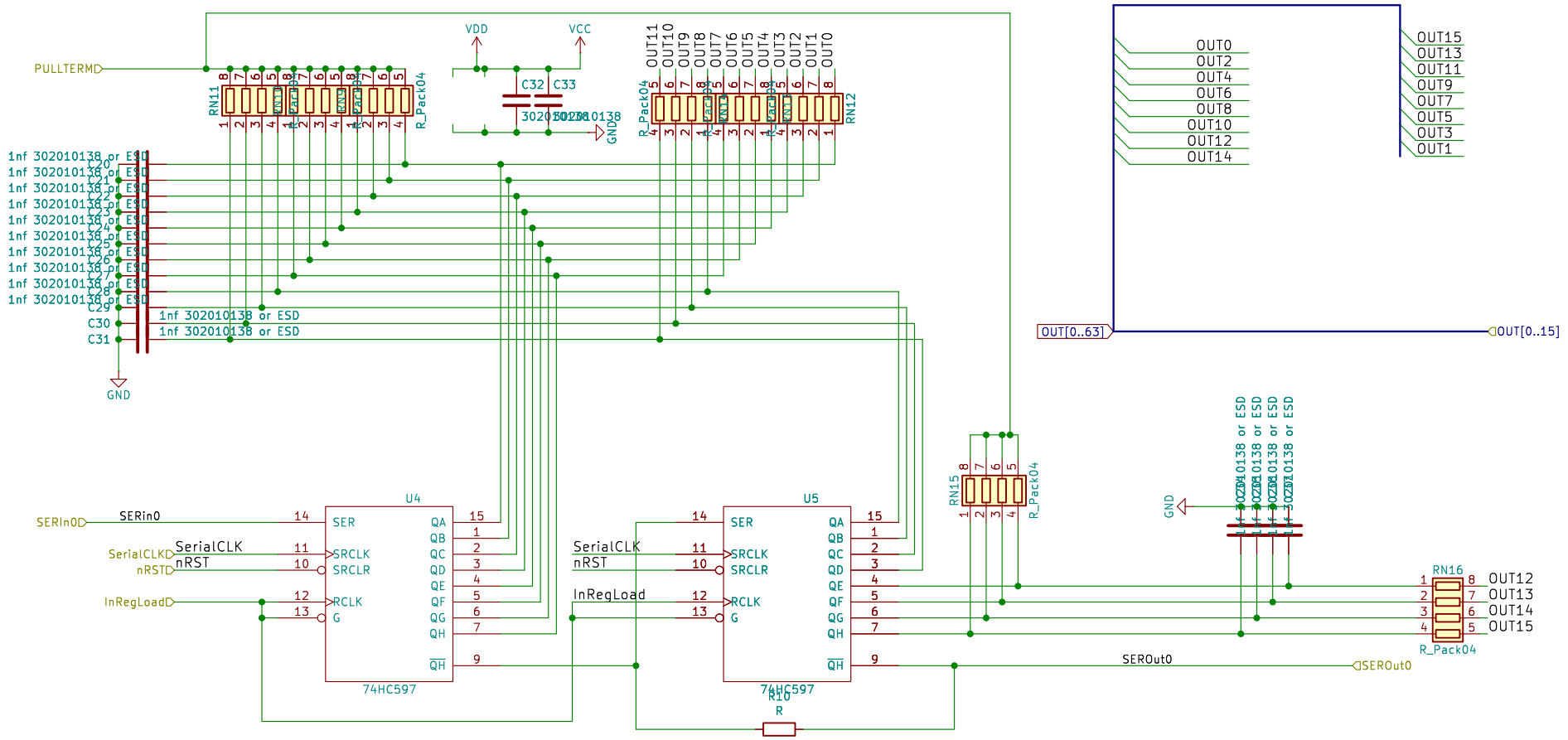

Sheet: /Ports0_15/
File: Ports0_15.sch

Title:

Size: A4	Date:	Rev:
KiCad E.D.A. 9.0.3		Id: 3/10

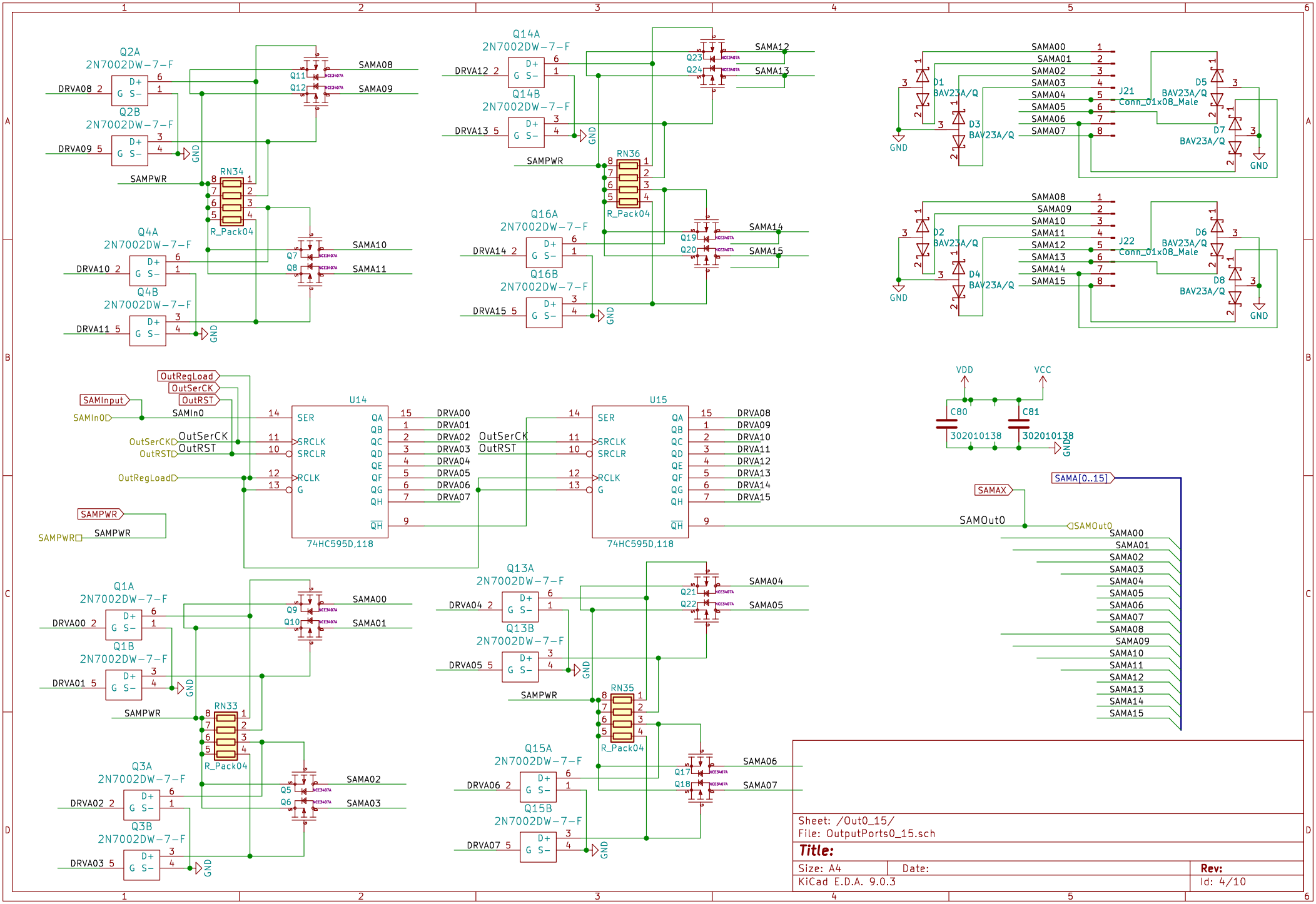
Q2A
2N7002DW-7-F
Q2B
2N7002DW-7-F
DRVA08
DRVA09
SAMA08
SAMA09
Q11
Q12
RN34
R_Pack04
SAMPWR
Q4A
2N7002DW-7-F
Q4B
2N7002DW-7-F
DRVA10
DRVA11
SAMA10
SAMA11
Q7
Q8
Q14A
2N7002DW-7-F
Q14B
2N7002DW-7-F
DRVA12
DRVA13
SAMA12
SAMA13
Q23
Q24
RN36
R_Pack04
Q16A
2N7002DW-7-F
Q16B
2N7002DW-7-F
DRVA14
DRVA15
SAMA14
SAMA15
Q19
Q20
GND
SAMA00
SAMA01
SAMA02
SAMA03
SAMA04
SAMA05
SAMA06
SAMA07
J21
Conn_01x08_Male
D1
BAV23A/Q
D3
BAV23A/Q
D5
BAV23A/Q
D7
BAV23A/Q
SAMA08
SAMA09
SAMA10
SAMA11
SAMA12
SAMA13
SAMA14
SAMA15
J22
Conn_01x08_Male
D2
BAV23A/Q
D4
BAV23A/Q
D6
BAV23A/Q
D8
BAV23A/Q
OutRegLoad
OutSerCK
OutRST
SAMInput
SAMIn0
U14
SER
SRCLK
SRCLR
RCLK
G
QA
QB
QC
QD
QE
QF
QG
QH
QH
74HC595D,118
DRVA00
DRVA01
DRVA02
DRVA03
DRVA04
DRVA05
DRVA06
DRVA07
U15
DRVA08
DRVA09
DRVA10
DRVA11
DRVA12
DRVA13
DRVA14
DRVA15
VDD
VCC
C80
C81
302010138
SAMAX
SAMA[0..15]
SAMOut0
Q1A
2N7002DW-7-F
Q1B
2N7002DW-7-F
DRVA00
DRVA01
SAMA00
SAMA01
Q9
Q10
RN33
R_Pack04
Q3A
2N7002DW-7-F
Q3B
2N7002DW-7-F
DRVA02
DRVA03
SAMA02
SAMA03
Q5
Q6
Q13A
2N7002DW-7-F
Q13B
2N7002DW-7-F
DRVA04
DRVA05
SAMA04
SAMA05
Q21
Q22
RN35
R_Pack04
Q15A
2N7002DW-7-F
Q15B
2N7002DW-7-F
DRVA06
DRVA07
SAMA06
SAMA07
Q17
Q18
Sheet: /Out0_15/
File: OutputPorts0_15.sch
Title:
Size: A4
Date:
Rev:
KiCad E.D.A. 9.0.3
Id: 4/10

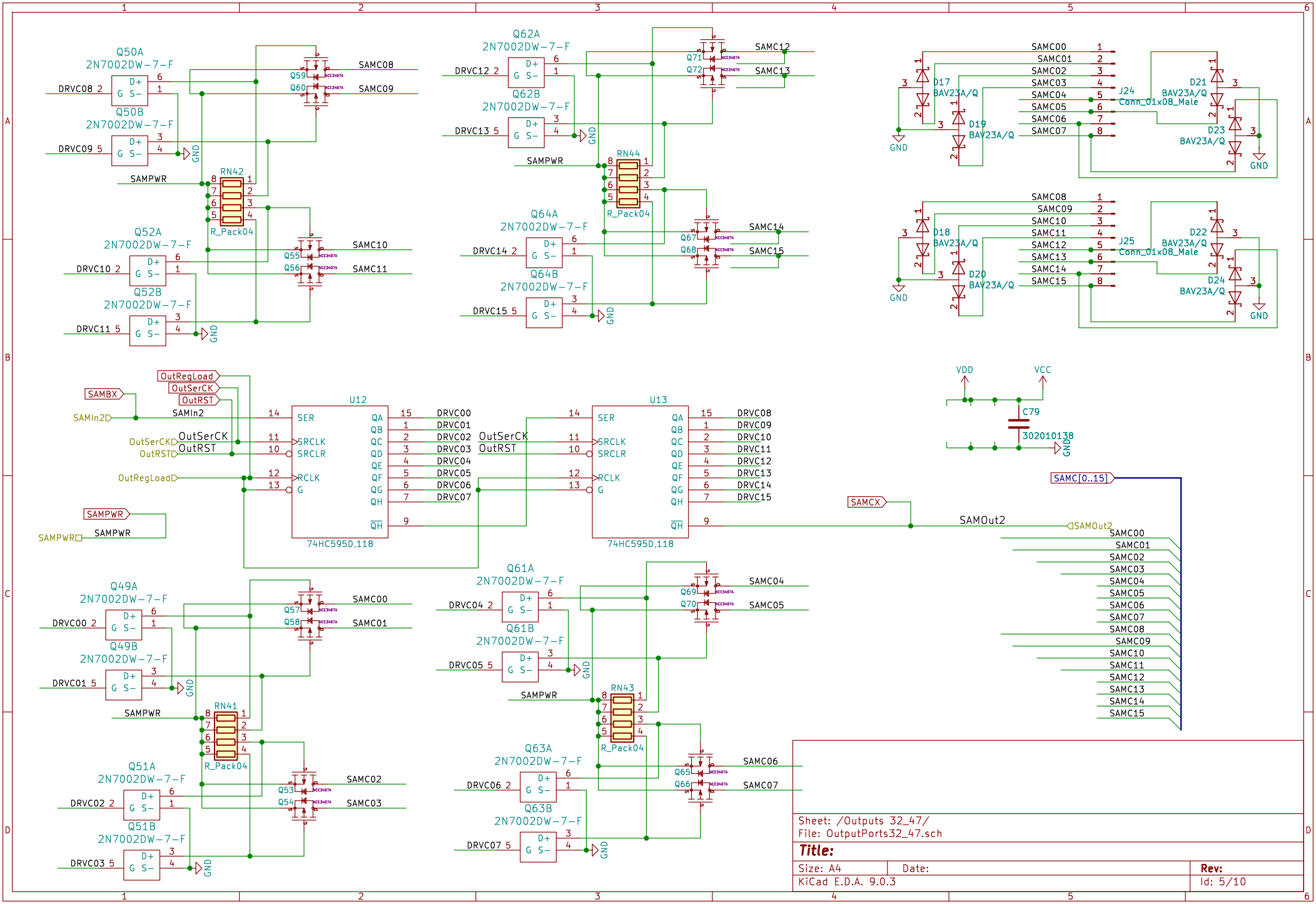
Q50A
2N7002DW-7-F
Q50B
2N7002DW-7-F
DRVC08
DRVC09
SAMC08
SAMC09
RN42
R_Pack04
SAMPWR
Q52A
2N7002DW-7-F
Q52B
2N7002DW-7-F
DRVC10
DRVC11
SAMC10
SAMC11
Q62A
2N7002DW-7-F
Q62B
2N7002DW-7-F
DRVC12
DRVC13
SAMC12
SAMC13
RN44
R_Pack04
Q64A
2N7002DW-7-F
Q64B
2N7002DW-7-F
DRVC14
DRVC15
SAMC14
SAMC15
SAMC00
SAMC01
SAMC02
SAMC03
SAMC04
SAMC05
SAMC06
SAMC07
D17
BAV23A/Q
D19
BAV23A/Q
J24
Conn_01x08_Male
D21
BAV23A/Q
D23
BAV23A/Q
SAMC08
SAMC09
SAMC10
SAMC11
SAMC12
SAMC13
SAMC14
SAMC15
D18
BAV23A/Q
D20
BAV23A/Q
J25
Conn_01x08_Male
D22
BAV23A/Q
D24
BAV23A/Q
GND
OutRegLoad
OutSerCK
OutRST
SAMBX
SAMIn2
U12
SER
SRCLK
SRCLR
RCLK
G
QA
QB
QC
QD
QE
QF
QG
QH
QH
74HC595D,118
DRVC00
DRVC01
DRVC02
DRVC03
DRVC04
DRVC05
DRVC06
DRVC07
U13
74HC595D,118
DRVC08
DRVC09
DRVC10
DRVC11
DRVC12
DRVC13
DRVC14
DRVC15
VDD
VCC
C79
302010138
SAMC[0..15]
SAMCX
SAMOut2
Q49A
2N7002DW-7-F
Q49B
2N7002DW-7-F
DRVC00
DRVC01
SAMC00
SAMC01
RN41
R_Pack04
Q51A
2N7002DW-7-F
Q51B
2N7002DW-7-F
DRVC02
DRVC03
SAMC02
SAMC03
Q61A
2N7002DW-7-F
Q61B
2N7002DW-7-F
DRVC04
DRVC05
SAMC04
SAMC05
RN43
R_Pack04
Q63A
2N7002DW-7-F
Q63B
2N7002DW-7-F
DRVC06
DRVC07
SAMC06
SAMC07
Sheet: /Outputs 32_47/
File: OutputPorts32_47.sch
Title:
Size: A4
Date:
Rev:
KiCad E.D.A. 9.0.3
Id: 5/10

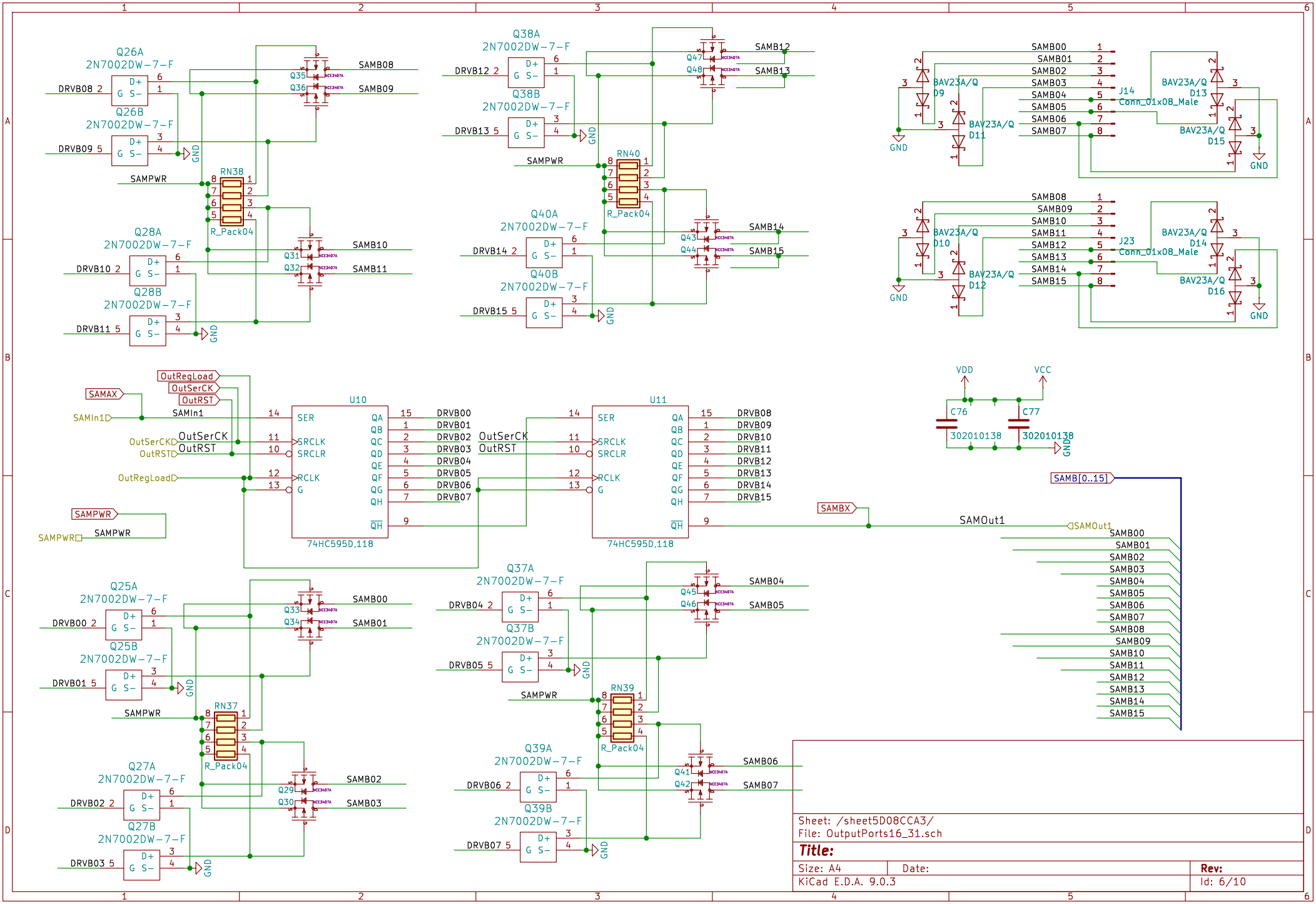
Q26A
2N7002DW-7-F
Q26B
2N7002DW-7-F
DRVB08
DRVB09
SAMPWR
RN38
R_Pack04
Q35
Q36
SAMB08
SAMB09
Q28A
2N7002DW-7-F
Q28B
2N7002DW-7-F
DRVB10
DRVB11
Q31
Q32
SAMB10
SAMB11
GND
Q38A
2N7002DW-7-F
Q38B
2N7002DW-7-F
DRVB12
DRVB13
Q47
Q48
SAMB12
SAMB13
RN40
R_Pack04
Q40A
2N7002DW-7-F
Q40B
2N7002DW-7-F
DRVB14
DRVB15
Q43
Q44
SAMB14
SAMB15
SAMB00
SAMB01
SAMB02
SAMB03
SAMB04
SAMB05
SAMB06
SAMB07
BAV23A/Q
D9
D11
D13
D15
J14
Conn_01x08_Male
SAMB08
SAMB09
SAMB10
SAMB11
SAMB12
SAMB13
SAMB14
SAMB15
D10
D12
D14
D16
J23
Conn_01x08_Male
OutRegLoad
OutSerCK
OutRST
SAMAX
SAMIn1
U10
SER
SRCLK
SRCLR
RCLK
G
QA
QB
QC
QD
QE
QF
QG
QH
QH
74HC595D,118
DRVB00
DRVB01
DRVB02
DRVB03
DRVB04
DRVB05
DRVB06
DRVB07
U11
DRVB08
DRVB09
DRVB10
DRVB11
DRVB12
DRVB13
DRVB14
DRVB15
VDD
VCC
C76
C77
302010138
SAMB[0..15]
SAMBX
SAMOut1
Q25A
2N7002DW-7-F
Q25B
2N7002DW-7-F
DRVB00
DRVB01
Q33
Q34
RN37
R_Pack04
Q27A
2N7002DW-7-F
Q27B
2N7002DW-7-F
DRVB02
DRVB03
Q29
Q30
Q37A
2N7002DW-7-F
Q37B
2N7002DW-7-F
DRVB04
DRVB05
Q45
Q46
RN39
R_Pack04
Q39A
2N7002DW-7-F
Q39B
2N7002DW-7-F
DRVB06
DRVB07
Q41
Q42
Sheet: /sheet5D08CCA3/
File: OutputPorts16_31.sch
Title:
Size: A4
Date:
Rev:
KiCad E.D.A. 9.0.3
Id: 6/10

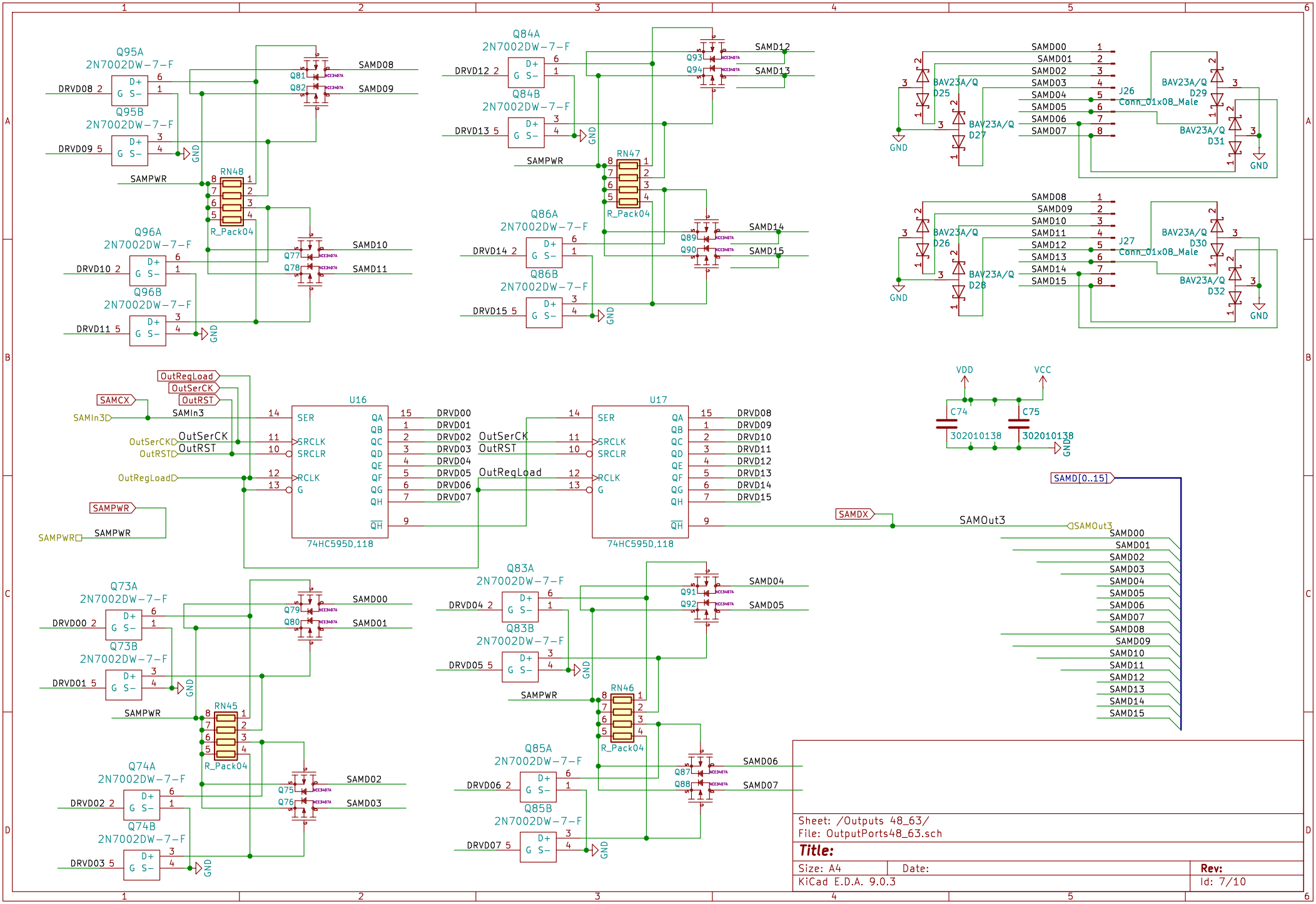
Q95A
2N7002DW-7-F
Q95B
2N7002DW-7-F
DRVD08
DRVD09
SAMD08
SAMD09
Q81
Q82
RN48
R_Pack04
SAMPWR
Q96A
2N7002DW-7-F
Q96B
2N7002DW-7-F
DRVD10
DRVD11
SAMD10
SAMD11
Q77
Q78
GND
Q84A
2N7002DW-7-F
Q84B
2N7002DW-7-F
DRVD12
DRVD13
SAMD12
SAMD13
Q93
Q94
RN47
R_Pack04
Q86A
2N7002DW-7-F
Q86B
2N7002DW-7-F
DRVD14
DRVD15
SAMD14
SAMD15
Q89
Q90
SAMD00
SAMD01
SAMD02
SAMD03
SAMD04
SAMD05
SAMD06
SAMD07
BAV23A/Q
D25
D27
D29
D31
J26
Conn_01x08_Male
SAMD08
SAMD09
SAMD10
SAMD11
SAMD12
SAMD13
SAMD14
SAMD15
D26
D28
D30
D32
J27
Conn_01x08_Male
OutRegLoad
OutSerCK
OutRST
SAMCX
SAMIn3
U16
SER
SRCLK
SRCLR
RCLK
G
QA
QB
QC
QD
QE
QF
QG
QH
QH
74HC595D,118
DRVD00
DRVD01
DRVD02
DRVD03
DRVD04
DRVD05
DRVD06
DRVD07
U17
DRVD08
DRVD09
DRVD10
DRVD11
DRVD12
DRVD13
DRVD14
DRVD15
VDD
VCC
C74
C75
302010138
SAMD[0..15]
SAMDX
SAMOut3
Q73A
2N7002DW-7-F
Q73B
2N7002DW-7-F
DRVD00
DRVD01
Q79
Q80
RN45
R_Pack04
Q74A
2N7002DW-7-F
Q74B
2N7002DW-7-F
DRVD02
DRVD03
Q75
Q76
Q83A
2N7002DW-7-F
Q83B
2N7002DW-7-F
DRVD04
DRVD05
Q91
Q92
RN46
R_Pack04
Q85A
2N7002DW-7-F
Q85B
2N7002DW-7-F
DRVD06
DRVD07
Q87
Q88
Sheet: /Outputs 48_63/
File: OutputPorts48_63.sch
Title:
Size: A4
Date:
Rev:
KiCad E.D.A. 9.0.3
Id: 7/10

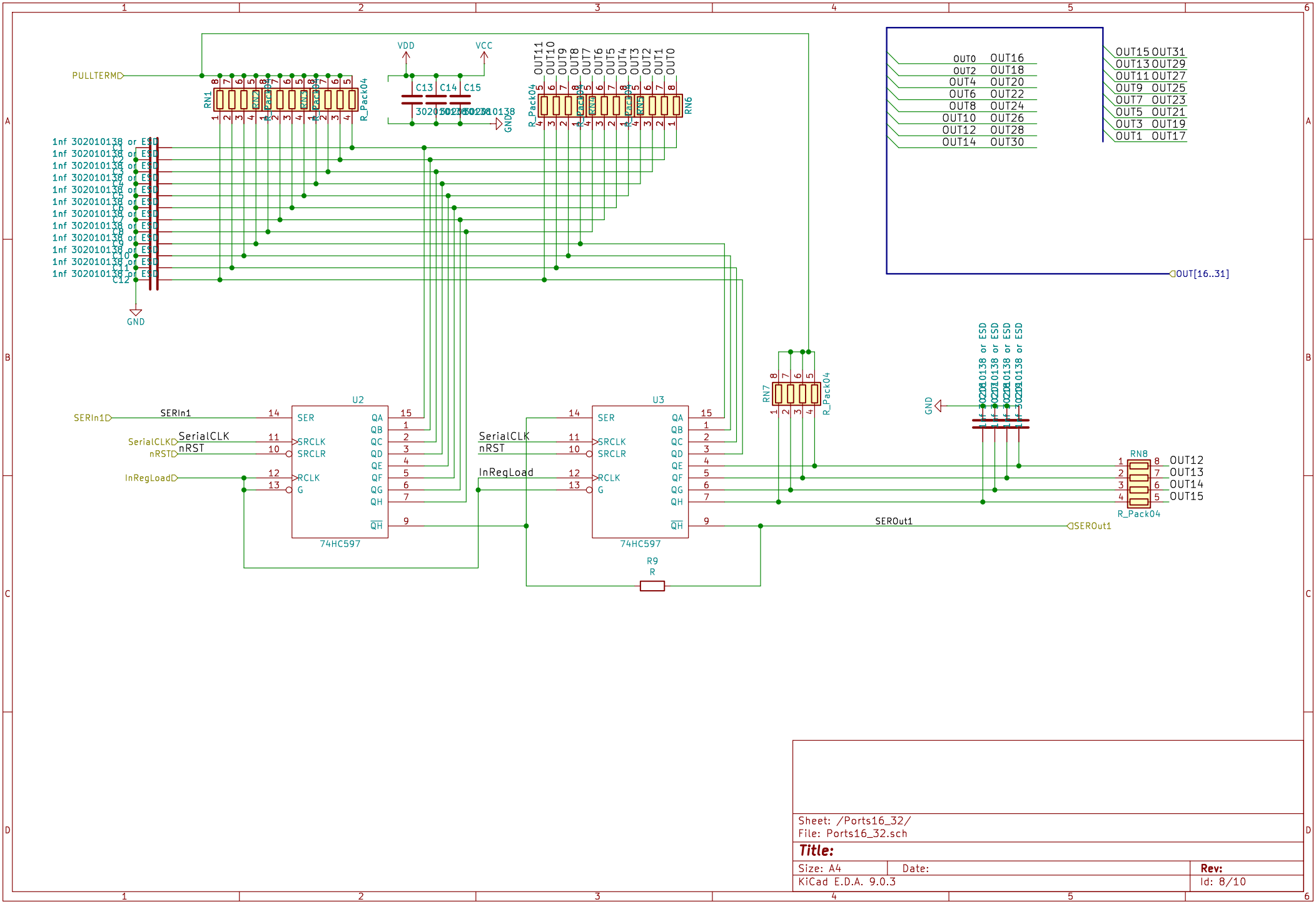

Sheet: /Ports16_32/
File: Ports16_32.sch

Title:

Size: A4	Date:	Rev:
KiCad E.D.A. 9.0.3		Id: 8/10

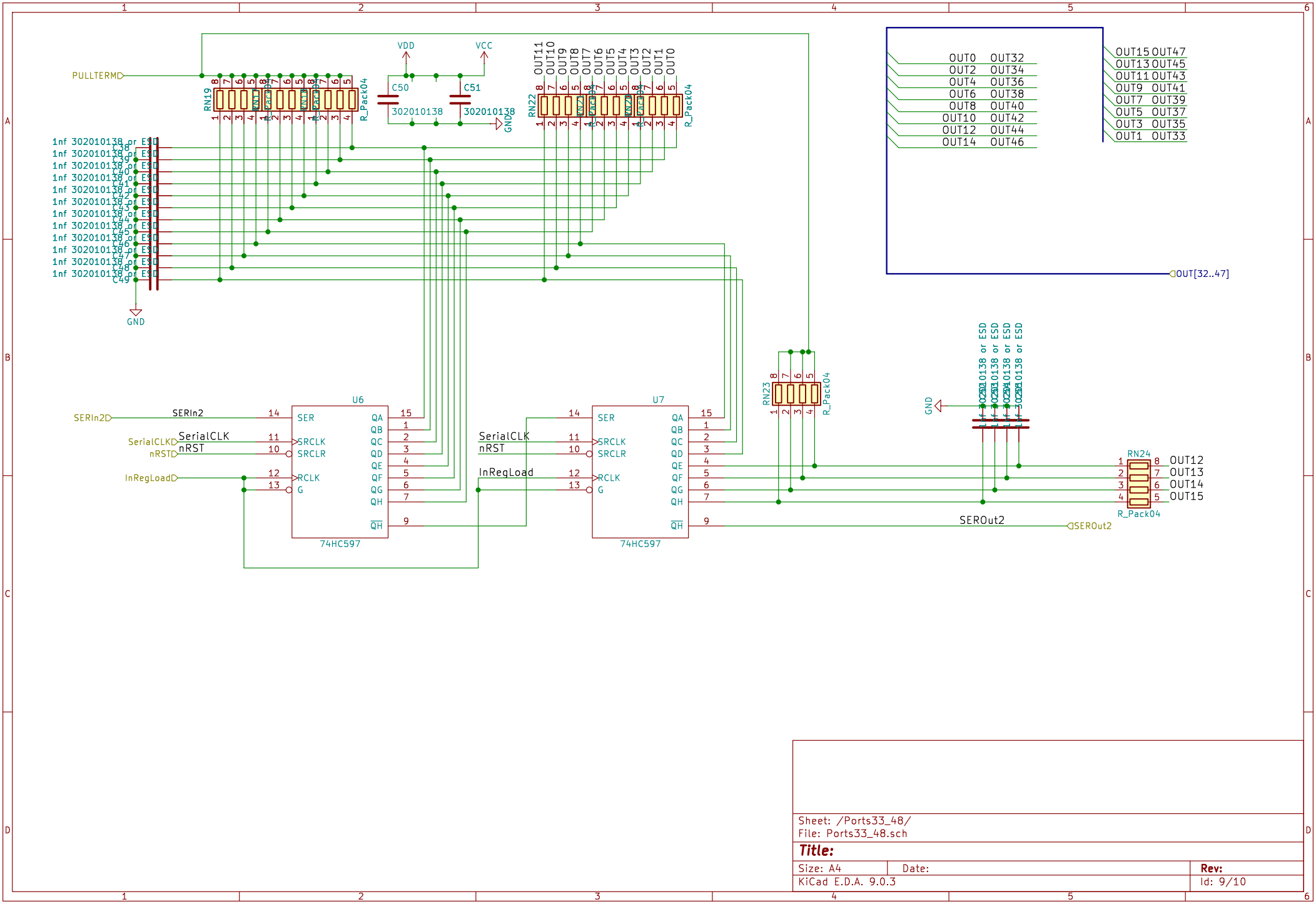

Sheet: /Ports33_48/
File: Ports33_48.sch

Title:

Size: A4	Date:	Rev:
KiCad E.D.A. 9.0.3		Id: 9/10

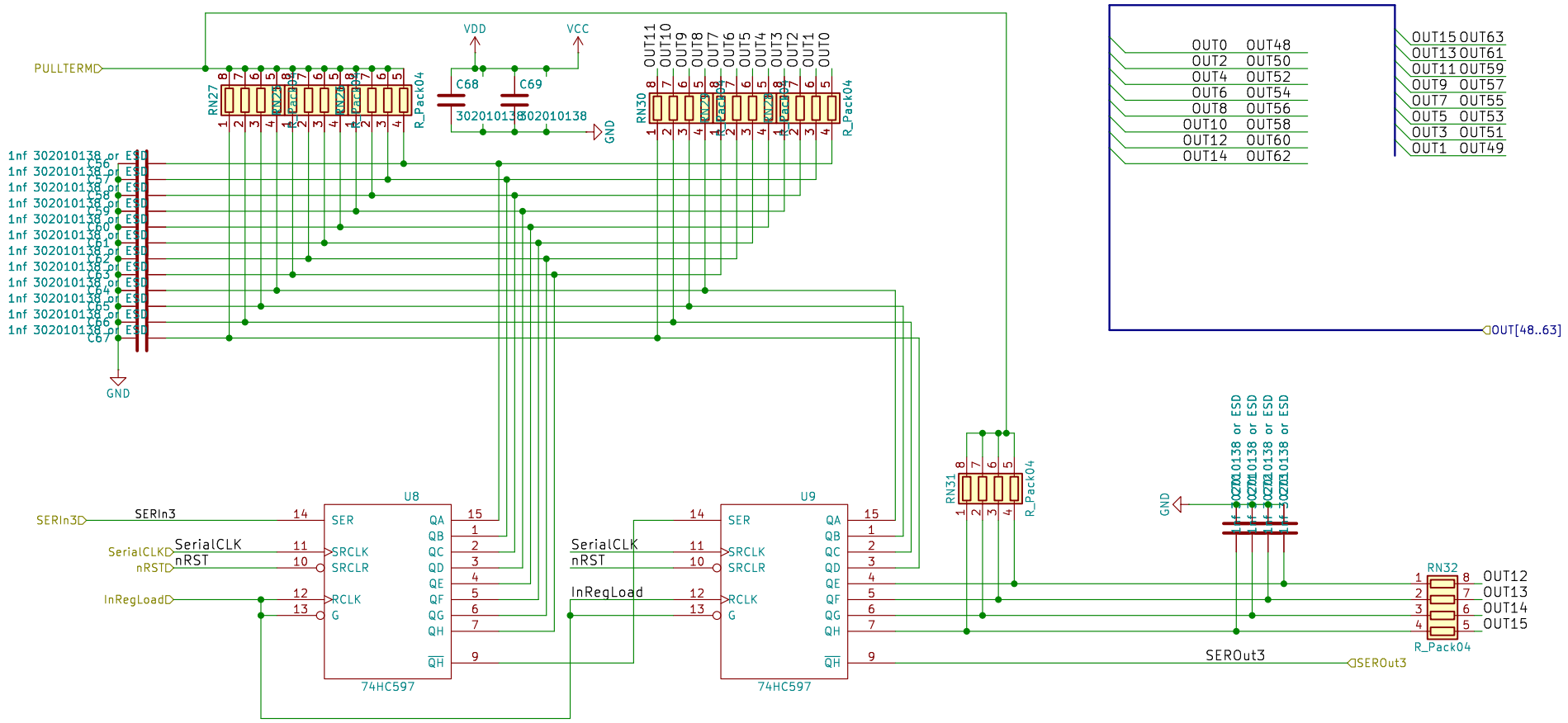

Sheet: /Ports49_64/
File: Ports49_64.sch

Title:

Size: A4	Date:	Rev:
KiCad E.D.A. 9.0.3		Id: 10/10